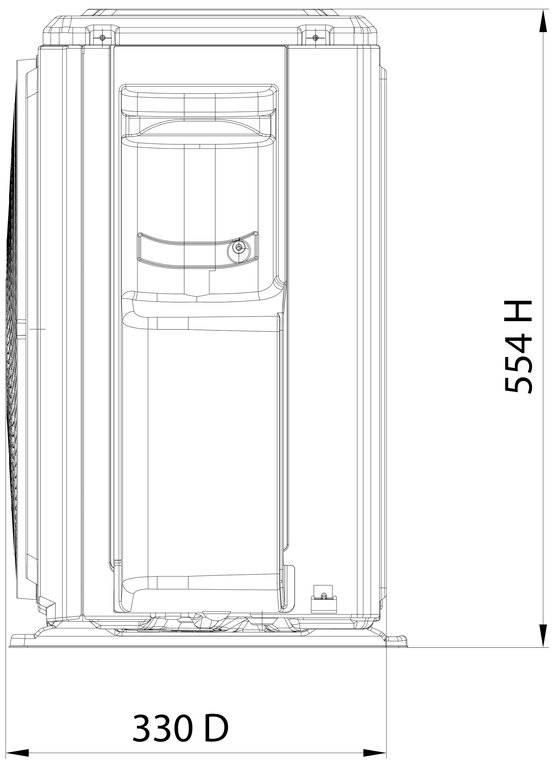

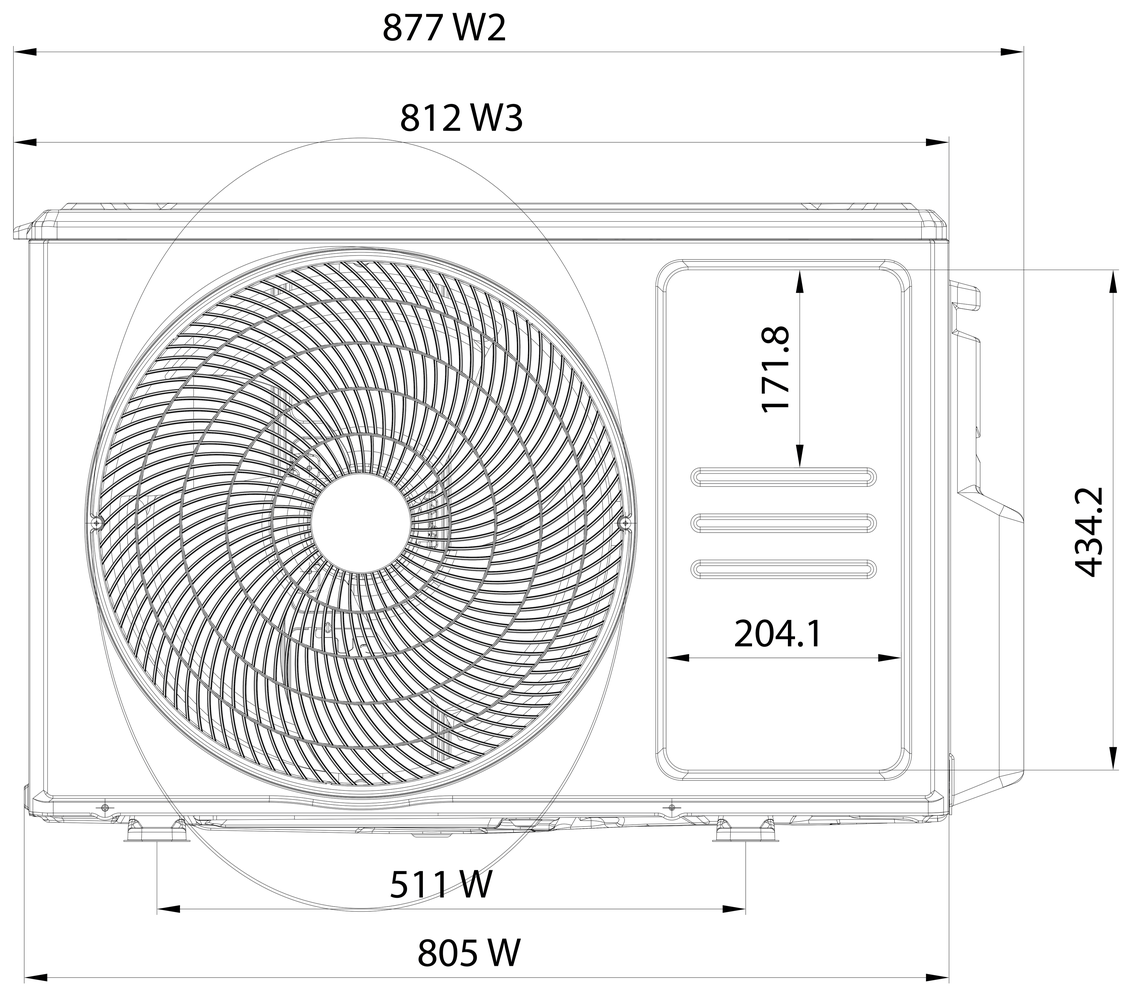

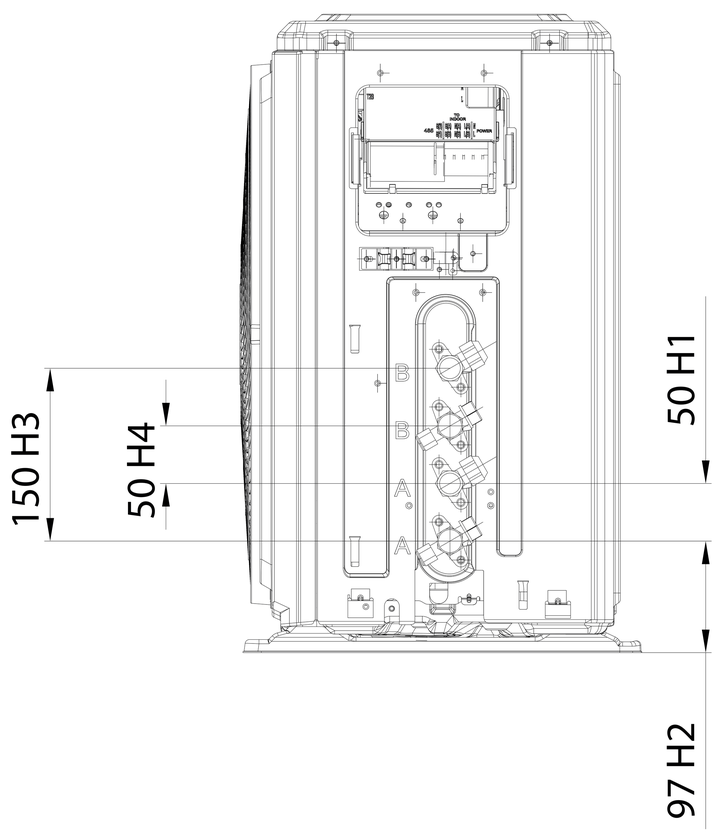

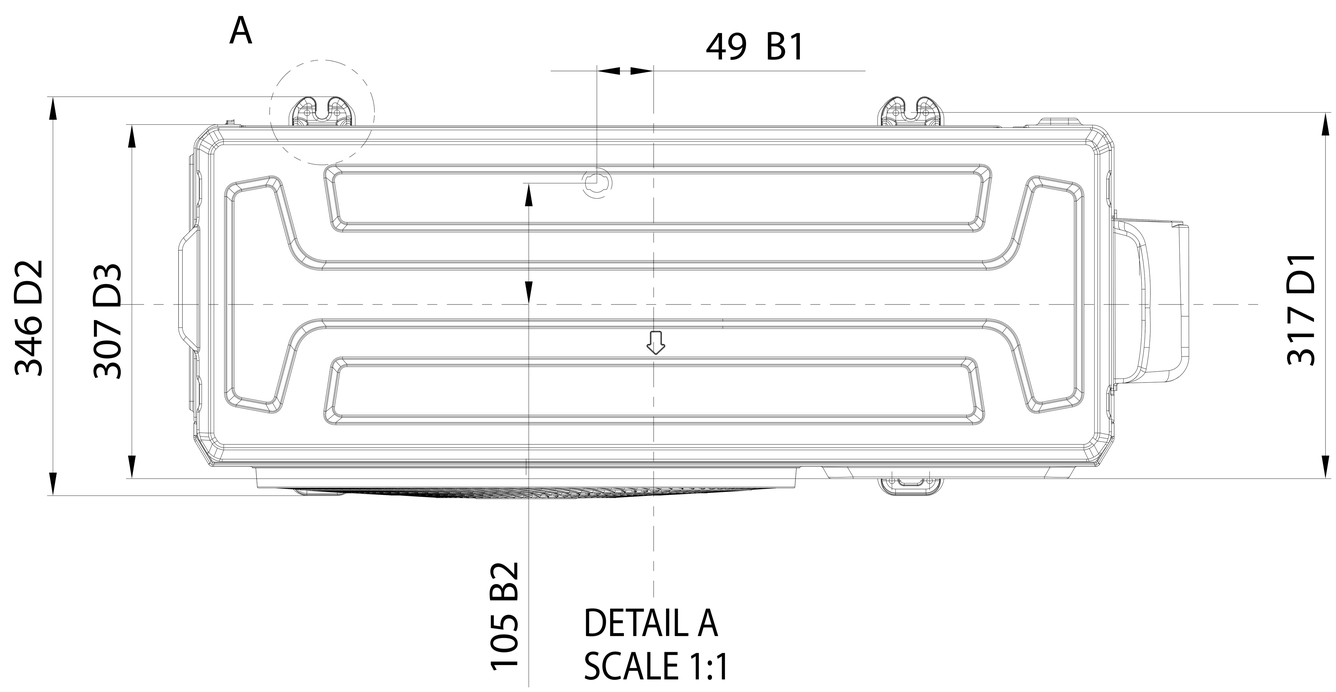
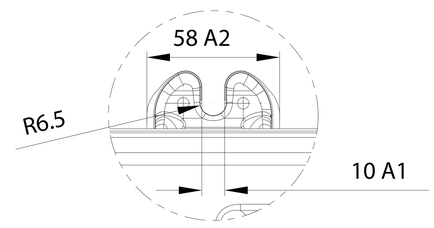
DETAIL A
SCALE 1:1